98

[redacted]

Homework #5

a. 9×4 matrix

588.8877	610.6192	610.6192	571.1305
794.517	823.8368	823.8368	770.5594
997.8669	1034.691	1034.691	967.7775
506.9895	525.6987	525.6987	491.7019
895.4306	928.4744	928.4744	868.4301
1017.343	1054.886	1054.886	986.6668
646.9179	670.7909	670.7909	627.4109
833.4538	864.2104	864.2104	808.3221
1023.756	1061.535	1061.535	992.8857

9×1 vector of average S/N

55.4847063402767
58.0861213015566
60.0655092603905
54.1840363210477
59.1246957365357
60.2334084647442
56.3010400932408
58.5016874786430
60.2879839783954

b.

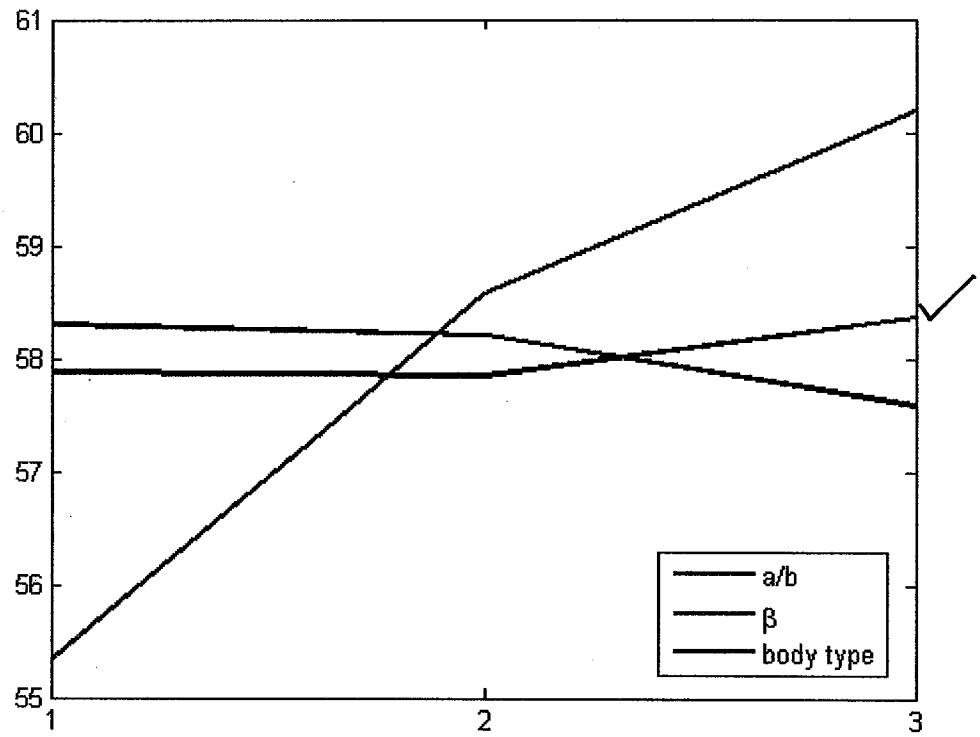

c. The most robust design includes β=70°, a/b=3 , and body type =1 which is the 3D trapezoid.

d.

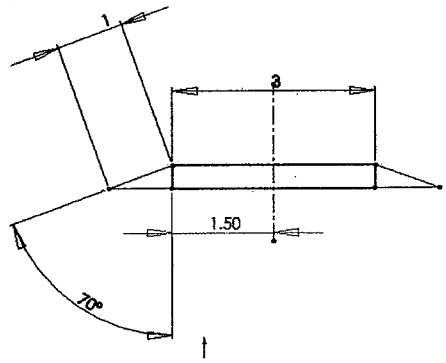

e. I believe that this geometry configuration makes sense because it allows for the maximum amount of surface area to be exposed to the sun providing power at a time. With a higher angle, the distance on the top and bottom of the trapezoid is greater than if the angle is smaller allowing for the increase of the surface area that is a flat surface. In addition, the higher angle decreases the amount of surface that is curved on the surface.

-2

what does this mean? → also, the 3D trap. has no curved surface.

f. The structures subsystem could have a strong influence on the vehicle configuration. The structures subsystem decides what material is to be used for the spacecraft. The configuration of the satellite makes on impact on the material chosen since it greatly influences the weight of the spacecraft. I believe the top three design parameters are the same that were used in the homework assignment and include a/b, β, and body type. With a chosen material, the Taguchi Method can be used to minimize the weight of the spacecraft.

g. I think the Taguchi Method is a useful technique that allows the number of experiments to be done to decrease by a dramatic number. It allows for a good representation of the data being looked at to be cut down while providing adequate information. By doing so, time and money are saved in making a decision. I feel that if the Taguchi Method doesn't provide enough information, than the people looking at the data can decide how to narrow down the results by the information that they obtained. I can see how sometimes data is obtained that is too close to make a precise design decision, but now the area to focus on is better known than before. A few more configuration might be needed to gain enough knowledge go decide a better design than what was obtained from the Taguchi Method. I believe that the Taguchi Method is a useful technique to be used by people in design since it limits how much data you have to look at a time to make a design decision. The Taguchi Method can be used whether you want to maximize or minimize your quality parameter for the design. I think it is nice that the same technique can be used no matter what you are looking for from the data. Therefore, I believe the Taguchi Method to be a useful and good technique to use in the design process.

h. Hard copy of code is below:

```
%Emily Svrcek
%Homework 5
clear all
close all
clc
design=[1 1 1;1 2 2;1 3 3;2 1 3; 2 2 1;2 3 2;3 1 2;3 2 3;3 3 1];
noise=[1 1 1;1 2 2;2 1 2;2 2 1];
an=zeros(9,4);
output=zeros(9,4);
s_n=zeros(9,1);
r=148107600;
au=1.4959787e8;
s=302;
```

```
years=5;
n1=[0,10];
n2=[0,10];
n3=[0.025,0.035];
x1=[1,2,3];
x2=[20,45,70];
x3=[1,2,3];
x_all=[x1;x2;x3];
n_all=[n1;n2;n3];
count=0;
for j=1:9
  for k=1:3
    for i=1:3
      if k==1 && i==design(j,k)
        a_b=x_all(k,design(j,k));
        break
      elseif k==2 && i==design(j,k)
        beta=x_all(k,design(j,k));
        break
      elseif k==3
        count=count+1;
        body=x_all(i,design(j,k));
        if body == 1
          body_eqn=abs(fzero(@(a) a^2+2*a^2/a_b-3,0));
          check=body_eqn^2+2*body_eqn^2/a_b;
          break
        end
        if body == 2
          body_eqn=abs(fzero(@(a) a^2+4*(a^2/a_b*cosd(beta)+(a/a_b)^2*sind(beta)*cosd(beta))-3,0));
          check=body_eqn^2+4*(body_eqn^2/a_b*cosd(beta)+(body_eqn/a_b)^2*sind(beta)*cosd(beta));
          break
        end
        if body == 3
          body_eqn=abs(fzero(@(a) (a/2)^2*pi+pi*a/a_b*(2*a-a/a_b*sind(beta))-3,0));
          check=pi*(body_eqn/2)^2+pi*body_eqn/a_b*(2*body_eqn-body_eqn/a_b*sind(beta));
          break
        end
      end
    end
  end
  for m=1:4
    for n=1:3
      if n==1
        theta=n_all(n,noise(m,n));
      elseif n==2
        phi=n_all(n,noise(m,n));
      elseif n==3
        gamma=n_all(n,noise(m,n));
      end
    end
    if body==1
      an(j,m)=body_eqn^2*cosd(theta)*cosd(phi)+...
        body_eqn^2/a_b*cosd(90-beta-theta)*cosd(phi)+...
        body_eqn^2/a_b*cosd(90-beta+theta)*cosd(phi);
    end
    if body==2
```

```
        an(j,m)=body_eqn^2*cosd(theta)*cosd(phi)+ ...
          (body_eqn^2/a_b*cosd(beta)+(body_eqn/a_b)^2*sind(beta)*cosd(beta))*cosd(90-beta-theta)*cosd(phi)+...
          (body_eqn^2/a_b*cosd(beta)+(body_eqn/a_b)^2*sind(beta)*cosd(beta))*cosd(90-beta+theta)*cosd(phi)+...
          (body_eqn^2/a_b*cosd(beta)+(body_eqn/a_b)^2*sind(beta)*cosd(beta))*cosd(90-beta-phi)*cosd(theta)+...
          (body_eqn^2/a_b*cosd(beta)+(body_eqn/a_b)^2*sind(beta)*cosd(beta))*cosd(90-beta+phi)*cosd(theta);
      end
      if body==3
        an(j,m)=pi*(body_eqn/2)^2*cosd(theta)*cosd(phi)+...
          pi*body_eqn/a_b*(2*body_eqn-body_eqn/a_b*sind(beta))*sind(beta)*cosd(theta)*cosd(phi);
      end
      output(j,m)=s/(1-gamma)^years*(au/r)^2*an(j,m);
    end
    s_n(j,1)=-10*(log10(1/4*(1/output(j,1)^2+1/output(j,2)^2+1/output(j,3)^2+1/output(j,4)^2)));
  end
  x1_1=[];
  x1_2=[];
  x1_3=[];
  x2_1=[];
  x2_2=[];
  x2_3=[];
  x3_1=[];
  x3_2=[];
  x3_3=[];
  for k=1:3
    for j=1:9
      if design(j,k)==1
        if k==1
          x1_1=[x1_1 s_n(j)];
        elseif k==2
          x2_1=[x2_1 s_n(j)];
        else
          x3_1=[x3_1 s_n(j)];
        end
      elseif design(j,k)==2
        if k==1
          x1_2=[x1_2 s_n(j)];
        elseif k==2
          x2_2=[x2_2 s_n(j)];
        else
          x3_2=[x3_2 s_n(j)];
        end
      else
        if k==1
          x1_3=[x1_3 s_n(j)];
        elseif k==2
          x2_3=[x2_3 s_n(j)];
        else
          x3_3=[x3_3 s_n(j)];
        end
      end
    end
  end
  x1_plot(1)=sum(x1_1,2)/length(x1_1);
  x1_plot(2)=sum(x1_2,2)/length(x1_2);
  x1_plot(3)=sum(x1_3,2)/length(x1_3);
  x2_plot(1)=sum(x2_1,2)/length(x2_1);
```

```
x2_plot(2)=sum(x2_2,2)/length(x2_2);
x2_plot(3)=sum(x2_3,2)/length(x2_3);
x3_plot(1)=sum(x3_1,2)/length(x3_1);
x3_plot(2)=sum(x3_2,2)/length(x3_2);
x3_plot(3)=sum(x3_3,2)/length(x3_3);
axes1 = axes('Parent',figure,'XTick',[1 2 3]);
box('on');
hold('all');
y_plot=[1 2 3];
plot(y_plot,x1_plot,y_plot,x2_plot,y_plot,x3_plot,'linewidth',2)
legend('a/b','\beta','body type','location','best')
saveas(gcf, 'hw_5','png')
```